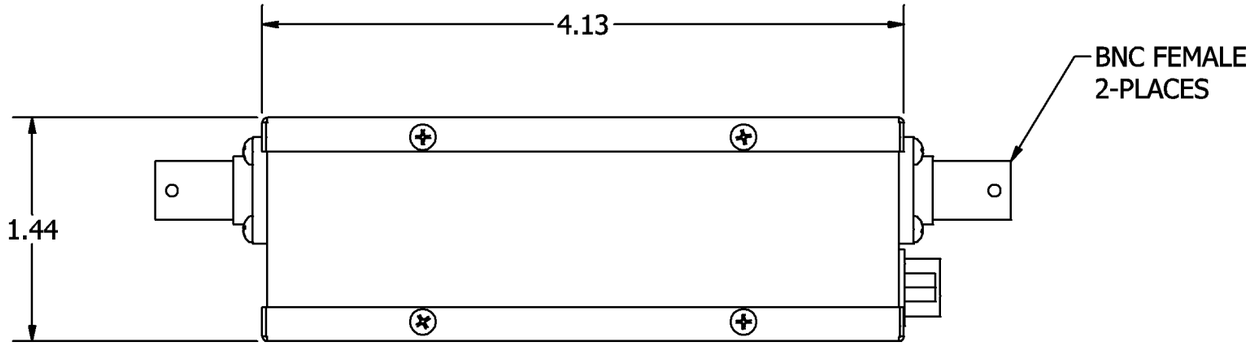

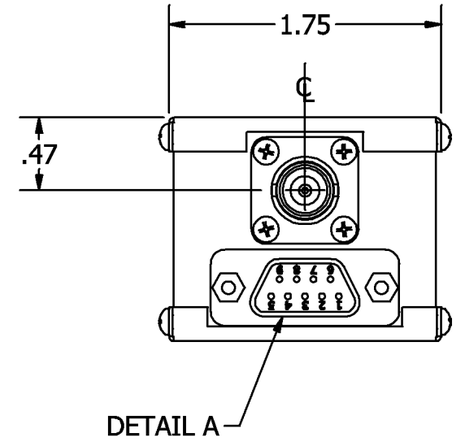

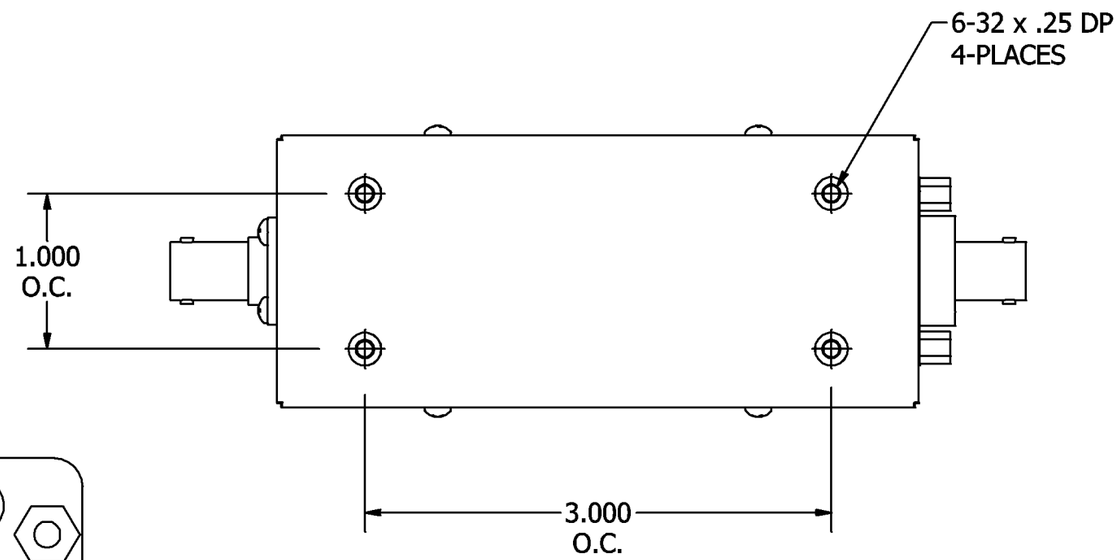

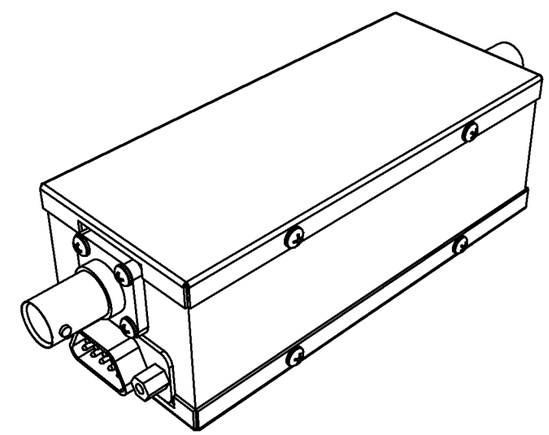

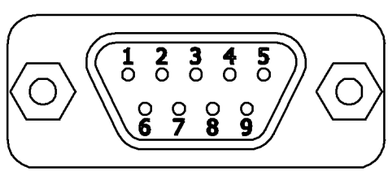

DETAIL A
DE-9P

PIN	FUNCTION
1	1dB TTL CONTROL
2	2dB TTL CONTROL
3	4dB TTL CONTROL
4	8dB TTL CONTROL
5	16dB TTL CONTROL
6	32dB TTL CONTROL
7	NO CONNECTION
8	GROUND
9	+5 Vdc

REV	ECN	DATE	BY	APPR
-	ISSUED	11-21-07	BZ	TEZ
A	24444	9-17-15	JZ	TEZ

JFW INDUSTRIES, INC.

www.jfwindustries.com PH: 317-887-1340

MATERIAL: BRASS		PROPRIETARY INFORMATION
FINISH: NICKEL		ALL SURFACES ARE TO BE FREE OF BURRS, PITS & SCRATCHES
MODEL: 50P-XXXX	SCALE: FULL	TOLERANCES .XX±.010 .XXX±.005 XX°±.5°
DESCRIPTION: PROGRAMMABLE ATTENUATOR		DWG #: 092-5638-01